TECHNICAL DATA	VA56 WITH VGA-VA5 INSTALLED
JAW WIDTH	4.95" (125.73mm)
BASE LENGTH	6.00" (152.4mm)
CLAMPING FORCE	3600 lbf @ 35 ft-lb (16 kN @ 47 Nm)
MAXIMUM TORQUE (LEADSCREW)	35 ft-lb (47 Nm)
MAXIMUM TORQUE (M5 FHCS)	55 in-lb (6 Nm)
MAXIMUM TORQUE (M6 BHCS)	65 in-lb (7.5 Nm)

VGA-VA5

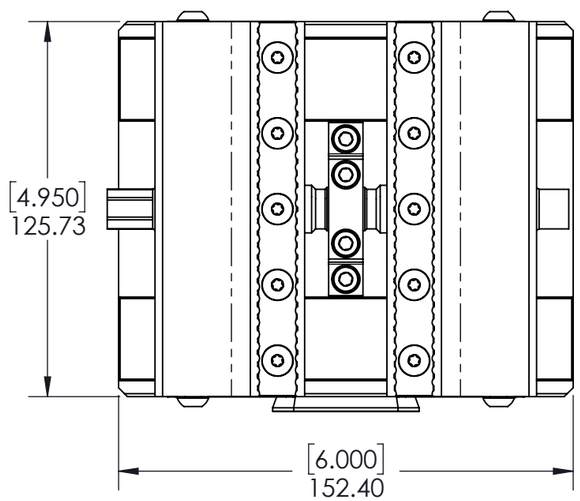

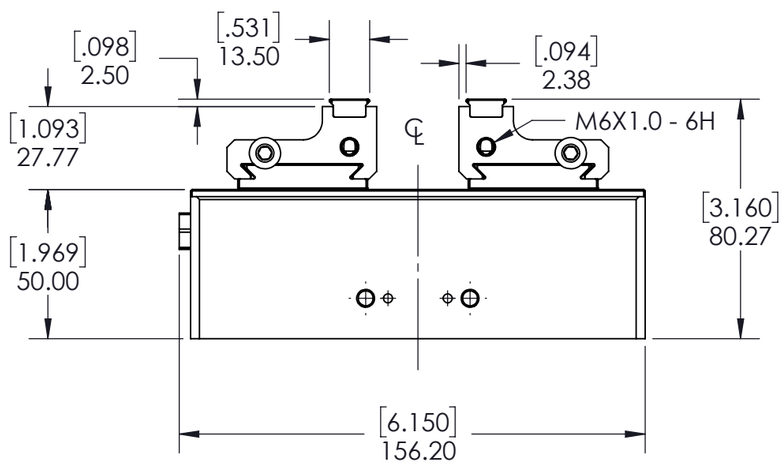

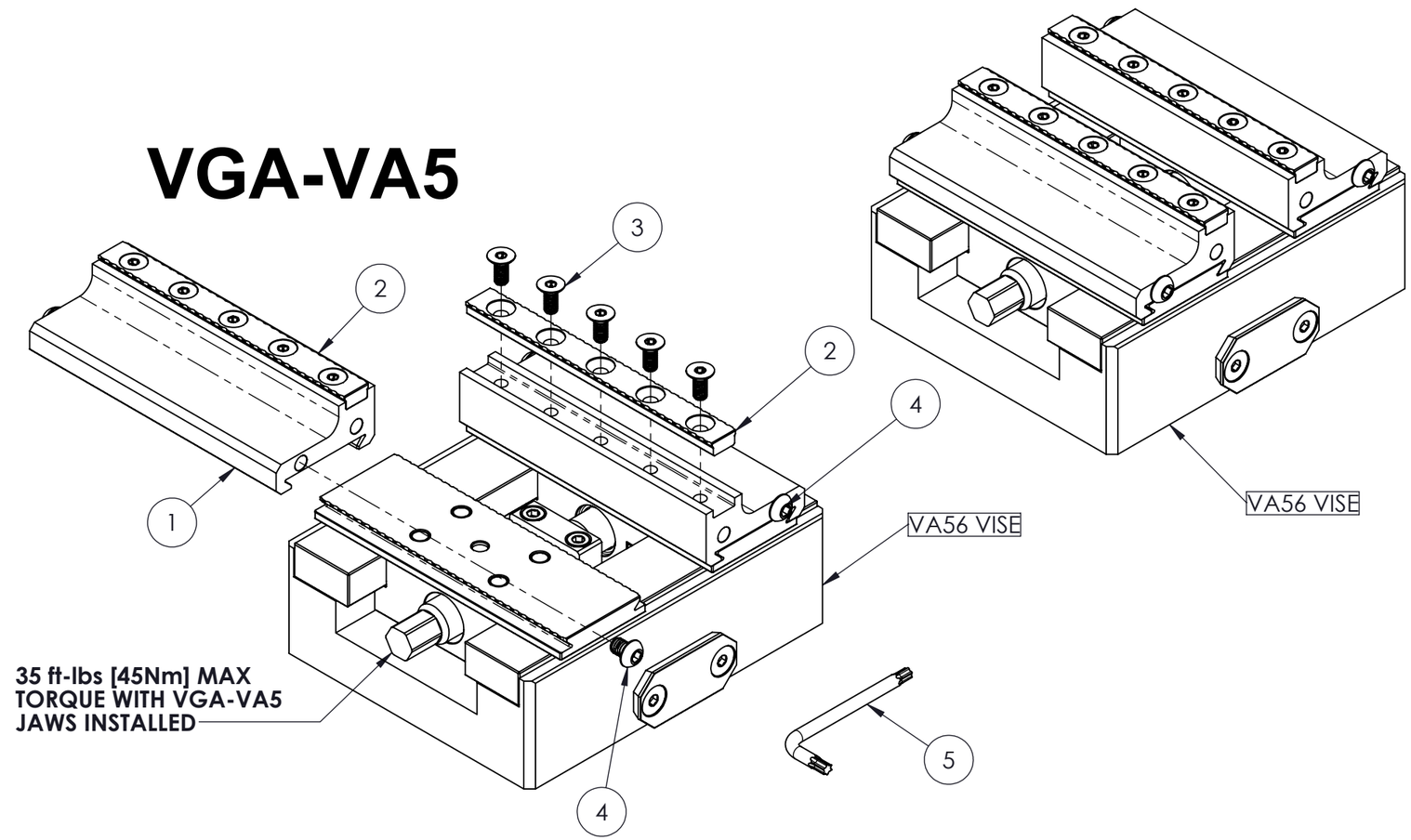

ITEM NO.	PART NUMBER	DESCRIPTION	QTY.
1	VA56-5	ALUMINUM STACKABLE GRIPPER JAW	2
2	VA56-7	GRIPPER BAR	2
3	M5X12MM.TPFHS	TORX PLUS FLAT HEAD SCREW M5X.8X12MM	10
4	M6X8MM.BHCS	BUTTON HEAD CAP SCREW, M6X1X8MM	4
5	IP25.L-KEY	IP25 TORX PLUS L-KEY	1

MILLIMETER

DRAWN IN ACCORDANCE WITH ASME Y14.5-2009

WWW.5THAXIS.COM

7140 ENGINEER ROAD
SAN DIEGO, CA 92111

P (858) 505-0432
F (858) 505-9344

TOLERANCES
UNLESS OTHERWISE SPECIFIED

x ± 0.1 .xx ± 0.01
.x ± 0.05 .xxx ± 0.005
ANGULAR ± 0.5°

THIRD ANGLE PROJECTION

5th AXIS®

DESCRIPTION
AUTOMATION LITE VISE - 5X6
W/ STACKABLE ALUMINUM GRIPPER JAW

SIZE	PART NO.	REV
B	VGA-VA5	A

DO NOT SCALE DRAWING	SCALE 1:2	WEIGHT: 9.05 lbs (4.1 kg)	SHEET 1 OF 1